EXIDE TECHNOLOGIES | ENERGIZING A NEW WORLD

Product overview

TUDOR

Batteries for Cars

High-Tech TA755

Part number	TA755
Technology	Flooded
EAN/GTIN	3661024054171
Voltage	12 V
Capacity	75.0 Ah
CCA	630 A
Length	270 mm
Width	173 mm
Height	222 mm
Box size	D26
Polarity	ETN 1
Terminal Type	EN taper post
Hold Down	Korean B1+B6
Weights (subject of variation)	17.40 kg

Polarity

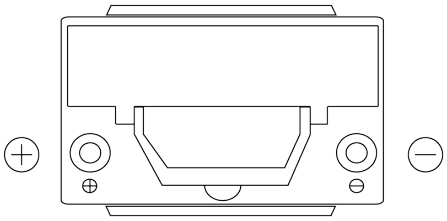

Terminal Type

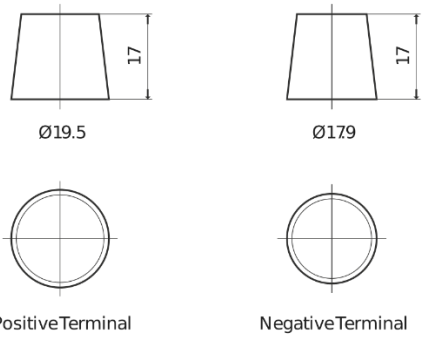

Hold Down

Design, features and specifications are subject to change without notice. We disclaim any representation or warranty, express or implied, concerning the data or recommendations, and in no event shall be liable for any loss or damage claimed to have arisen as a result. Some products may not be available in your local market.