EXIDE TECHNOLOGIES | ENERGIZING A NEW WORLD

Product overview

EXIDE

Batteries for Marine and Leisure

Start EN900

Part number	EN900
Technology	Flooded
EAN/GTIN	3661024036061
Voltage	12 V
Capacity	140.0 Ah
CCA	800 A
MCA	900
Length	513 mm
Width	189 mm
Height	223 mm
Box size	D04
Polarity	ETN 3
Terminal Type	EN taper post
Hold Down	B0
Weights (subject of variation)	34.10 kg

Polarity

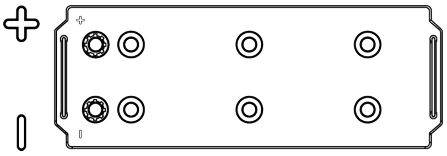

Terminal Type

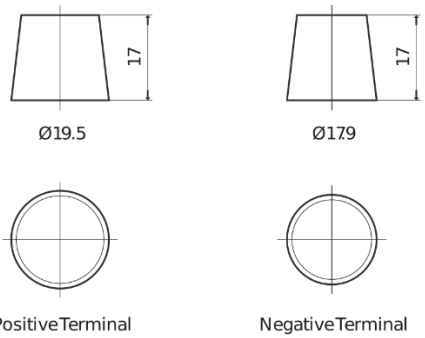

Hold Down

Design, features and specifications are subject to change without notice. We disclaim any representation or warranty, express or implied, concerning the data or recommendations, and in no event shall be liable for any loss or damage claimed to have arisen as a result. Some products may not be available in your local market.