EXIDE TECHNOLOGIES | ENERGIZING A NEW WORLD

Product overview

Batteries for Trucks, Buses, Construction, Agriculture

StartPRO EG2253

Part number	EG2253
Technology	Flooded
EAN/GTIN	3661024037549
Voltage	12 V
Capacity	225.0 Ah
CCA	1200 A
Length	518 mm
Width	274 mm
Height	240 mm
Box size	D06
Polarity	ETN 3
Terminal Type	EN taper post
Hold Down	B0
Weights (subject of variation)	54.90 kg

Polarity

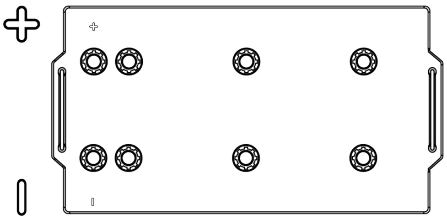

Terminal Type

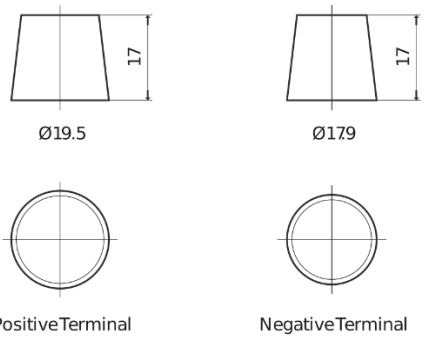

Hold Down

Design, features and specifications are subject to change without notice. We disclaim any representation or warranty, express or implied, concerning the data or recommendations, and in no event shall be liable for any loss or damage claimed to have arisen as a result. Some products may not be available in your local market.