EXIDE TECHNOLOGIES | ENERGIZING A NEW WORLD

**Product overview**

Centra

Batteries for Trucks, Buses, Construction, Agriculture

# StrongPRO EFB+ CE1853

MANDATORY FOR CHASSIS-END INSTALLATION

| | |
|---|---|
| Part number | CE1853 |
| Technology | EFB |
| EAN/GTIN | 3661024015257 |
| Voltage | 12 V |
| Capacity | 185.0 Ah |
| CCA | 1100 A |
| Length | 513 mm |
| Width | 223 mm |
| Height | 223 mm |
| Box size | D05 |
| Polarity | ETN 3 |
| Terminal Type | EN taper post |
| Hold Down | B0 |
| Weights (subject of variation) | 46.40 kg |

**Polarity**

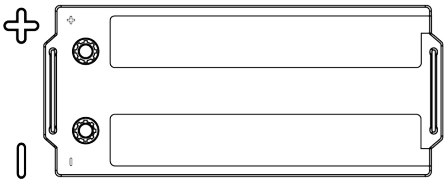

**Terminal Type**

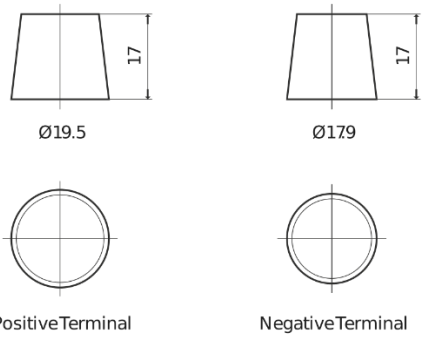


**Hold Down**

Design, features and specifications are subject to change without notice. We disclaim any representation or warranty, express or implied, concerning the data or recommendations, and in no event shall be liable for any loss or damage claimed to have arisen as a result. Some products may not be available in your local market.