EXIDE TECHNOLOGIES | ENERGIZING A NEW WORLD

Product overview

DETA

Batteries for Cars

Power DB620

Part number	DB620
Technology	Flooded
EAN/GTIN	3661024024532
Voltage	12 V
Capacity	62.0 Ah
CCA	540 A
Length	242 mm
Width	175 mm
Height	190 mm
Box size	L02
Polarity	ETN 0
Terminal Type	EN taper post
Hold Down	B13
Weights (subject of variation)	14.20 kg

Polarity

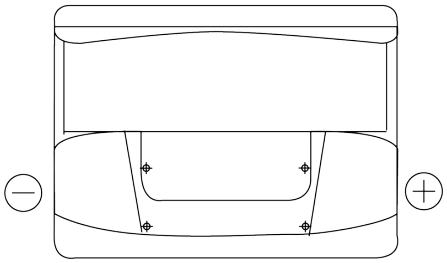

Terminal Type

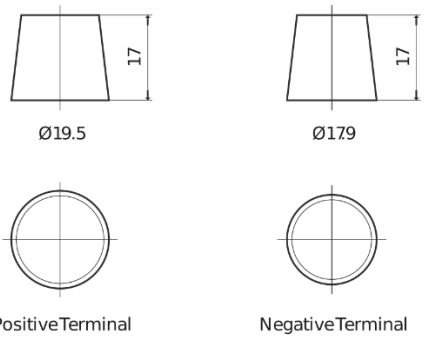

Hold Down

Design, features and specifications are subject to change without notice. We disclaim any representation or warranty, express or implied, concerning the data or recommendations, and in no event shall be liable for any loss or damage claimed to have arisen as a result. Some products may not be available in your local market.