EXIDE TECHNOLOGIES | ENERGIZING A NEW WORLD

Product overview

Centra

Batteries for Trucks, Buses, Construction, Agriculture

StartPRO CG1403

Part number	CG1403
Technology	Flooded
EAN/GTIN	3661024015424
Voltage	12 V
Capacity	140.0 Ah
CCA	800 A
Length	513 mm
Width	189 mm
Height	223 mm
Box size	D04
Polarity	ETN 3
Terminal Type	EN taper post
Hold Down	B0
Weights (subject of variation)	34.10 kg

Polarity

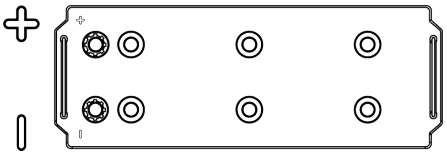

Terminal Type

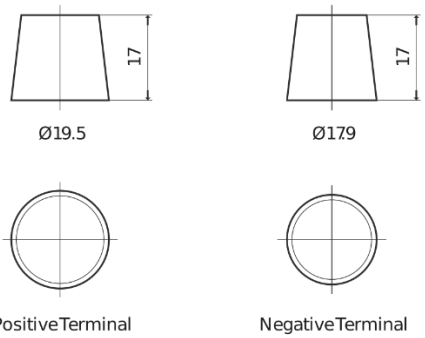

Hold Down

Design, features and specifications are subject to change without notice. We disclaim any representation or warranty, express or implied, concerning the data or recommendations, and in no event shall be liable for any loss or damage claimed to have arisen as a result. Some products may not be available in your local market.