EXIDE TECHNOLOGIES | ENERGIZING A NEW WORLD

Product overview

TUDOR

Batteries for Cars

Technica TB440

Part number	TB440
Technology	Flooded
EAN/GTIN	3661024054508
Voltage	12 V
Capacity	44.0 Ah
CCA	400 A
Length	175 mm
Width	175 mm
Height	190 mm
Box size	L00
Polarity	ETN 0
Terminal Type	EN taper post
Hold Down	B13
Weights (subject of variation)	10.70 kg

Polarity

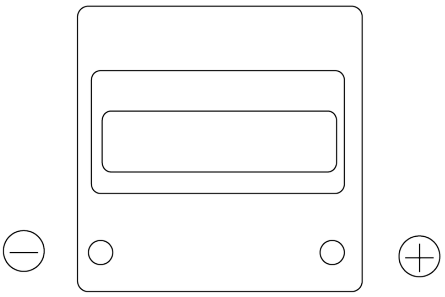

Terminal Type

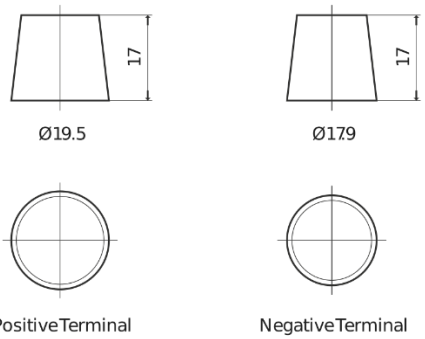

Hold Down

Design, features and specifications are subject to change without notice. We disclaim any representation or warranty, express or implied, concerning the data or recommendations, and in no event shall be liable for any loss or damage claimed to have arisen as a result. Some products may not be available in your local market.