EXIDE TECHNOLOGIES | ENERGIZING A NEW WORLD

Product overview

FULMEN

Batteries for Cars

Formula FB454

Part number	FB454
Technology	Flooded
EAN/GTIN	3661024044370
Voltage	12 V
Capacity	45.0 Ah
CCA	330 A
Length	237 mm
Width	127 mm
Height	227 mm
Box size	B24
Polarity	ETN 0
Terminal Type	EN taper post
Hold Down	B0
Weights (subject of variation)	11.40 kg

Polarity

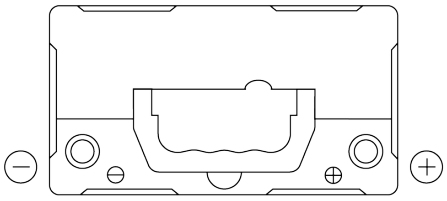

Terminal Type

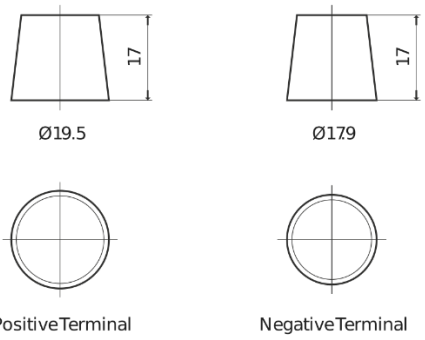

Hold Down

Design, features and specifications are subject to change without notice. We disclaim any representation or warranty, express or implied, concerning the data or recommendations, and in no event shall be liable for any loss or damage claimed to have arisen as a result. Some products may not be available in your local market.