EXIDE TECHNOLOGIES | ENERGIZING A NEW WORLD

Product overview

TUDOR

Batteries for Marine and Leisure

Dual EFB TZ650

Part number	TZ650
Technology	EFB
EAN/GTIN	3661024057486
Voltage	12 V
Capacity	75.0 Ah
CCA	750 A
Watt hour	650 Wh
Length	260 mm
Width	173 mm
Height	222 mm
Box size	D26
Polarity	ETN 1
Terminal Type	EN taper post
Hold Down	B0
Weights (subject of variation)	19.00 kg

Polarity

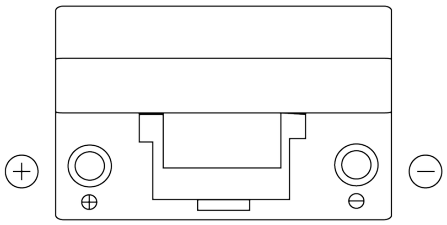

Terminal Type

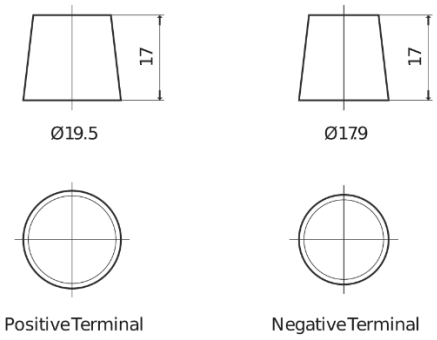

Hold Down

Design, features and specifications are subject to change without notice. We disclaim any representation or warranty, express or implied, concerning the data or recommendations, and in no event shall be liable for any loss or damage claimed to have arisen as a result. Some products may not be available in your local market.